MIXER SYSTEM DB 560T

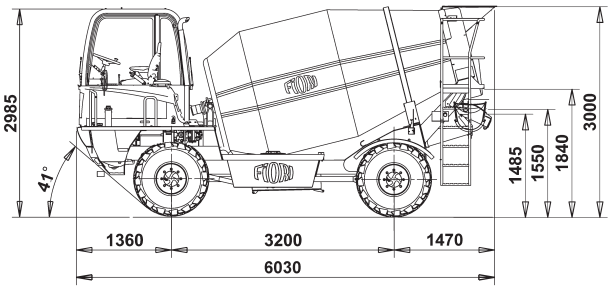

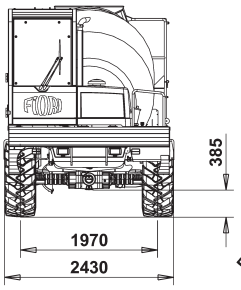

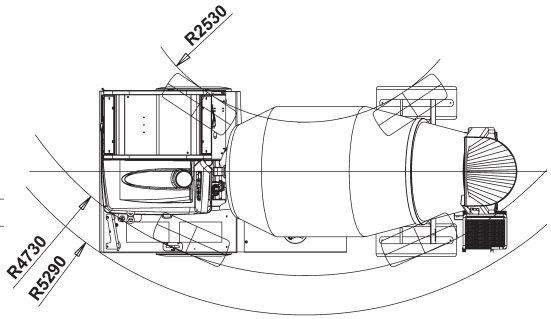

DIESEL ENGINE	Stage IIIA / Tier 3	Tier 4 Final EPA	Stage V
Model :	PERKINS series 1104	KOHLER series KDI 3404 TCRSCR	PERKINS series 904J-E36TA
Type :	Turbo Intercooler	Turbo Intercooler	Turbo Intercooler
Total displacement :	4400cc - 4 in line	3400cc - 4 in line	3600cc - 4 in line
Injection :	Mechanical control with direct injection	Electronic control with Common Rail	Electronic control with Common Rail
Aftertreatment sys.:	-	EGR + DOC + SCR	EGR + DOC + DPF + SCR
Cooling :	air water, dry air filter	air water, dry air filter	air water, dry air filter
Maximum power :	83 kW (113 Hp)	90 kW (122 Hp)	90 kW (122 Hp)
Adj. power :	83 kW (2200 rpm)	90 kW (2200 rpm)	90 kW (2400 rpm)
Maximum torque :	418 Nm a 1400 rpm	500 Nm a 1400 rpm	500 Nm a 1500 rpm
Alternator :	12V - 65 A	12V - 90 A	12V - 120 A

According to Directive 2006/42/CE

ELECTRIC SYSTEM

Battery: .....12 V - 132 Ah (600 A)
Road light system, rear working lights.

4X4 FOUR-WHEEL DRIVE

Hydrostatic "automotive" transmission with variable displacement pump and variable displacement hydraulic motor with electro-hydraulic control, and reverse gear control on the steering wheel.
Electro-hydraulically controlled mechanical gearbox for "working speed" and "road transfer" speed.

SPEED

4 forward gears		2 reverse gears
Ist	0 - 3.7 Km/h	0 - 3.7 Km/h
IInd	0 - 9.5 Km/h	0 - 3.7 Km/h
IIIrd	0 - 11.8 Km/h	0 - 11.8 Km/h
IVth	0 - 30.0 Km/h	0 - 11.8 Km/h

Traction / weight ratio 44%

AXLES AND WHEELS

Front load-bearing, oscillating (± 6°) and steering with planetary reduction gears on the wheel hubs.
Rear load-bearing and steering with planetary reduction gears on the wheel hubs and directly flanged gearbox.
Tyres ..... 18 -19.5 16PR

BRAKES

Internal oil-bath disc service and emergency brakes acting on the 4 wheels, activation with miniservo pump on independent dual circuit.
Negative type parking brake, with internal oil-bath discs on the rear axle and electro-hydraulically controlled release.

STEERING

Assisted by means of load-sensing power steering with double displacement on 4 steering wheels; steering selection device for: 2 steering wheels, 4 steering wheels - crab steering.

EQUIPMENT HYDRAULIC SYSTEM

Gear pump
Max. flow rate: ..... 45 litres/min.
Maximum pressure: .....180 bar
1-element water pump distributor.
Electrohydraulic chute distributor with control on the ground.
Aluminium heat exchanger for hydraulic oil cooling.
Pressurised closed-circuit intake with oil filter replaceable from the outside.

MIXING AND POURING

Double-cone drum with double-spiral mixing screws
Geometrical drum volume: .....7450 litres
Drum rotation speed: ..... 16 rpm.
Class S1 concrete produced as : .....5.5 cu m
Drum rotation by means of a piston pump with variable flow rate and an orbital hydraulic motor in closed circuit with infinitesimal electrical control positioned in the cabin and at the rear of the machine.
Electronic drum rotation control system: "constant speed drive".
Unloading chute with hydraulic tilting by means of a double-acting jack and 180° rotation.
Removable chute, for direct unloading from hopper.
3 chute extensions provided as standard equipment.
Access ladder for drum cleaning.

WATER SYSTEM

"Self-priming" volumetric water pump with quick-suction.
Max. capacity: .....260 litres/min.
Maximum head: ..... 4 bar
One sheet tank on the engine side with a capacity of .....340 litres.
Mix Control system for programmable and controlled management of water feeding to the drum and of mixing and unloading from the ground panel. Water feeding to the drum controlled by means of electromagnetic flow meter and fed litre reading on both the cabin display and at the rear of the vehicle.
Water pump activation from the driver's seat and from the ground panel. Suction selection from the ground with quick-coupling pipes.

CAB

Closed cab with heating system, designed in accordance with ROPS FOPS standards.
180° pivoting driving post. Anatomic seat with flexible suspension and height adjustment, seat belts.
Driving and equipment controls with ergonomic arrangement.
Sliding window on cabin door.
LCD TV display with camera for rear visibility.

SERVICE REFILL CAPACITIES

Fuel tank in cross-linked polyethylene, 95 litres
Total hydraulic system capacity: .....125 litres
Engine oil: .....7.96 kg

WEIGHTS

Operating weight: .....6000 kg
Max gross weight: .....18500 kg
load-carrying capacity: .....12500 kg

R.15 Valid as of 10/2021 for machines with standard equipment.